적 용 규 격
SPECIFICATION APPLIED

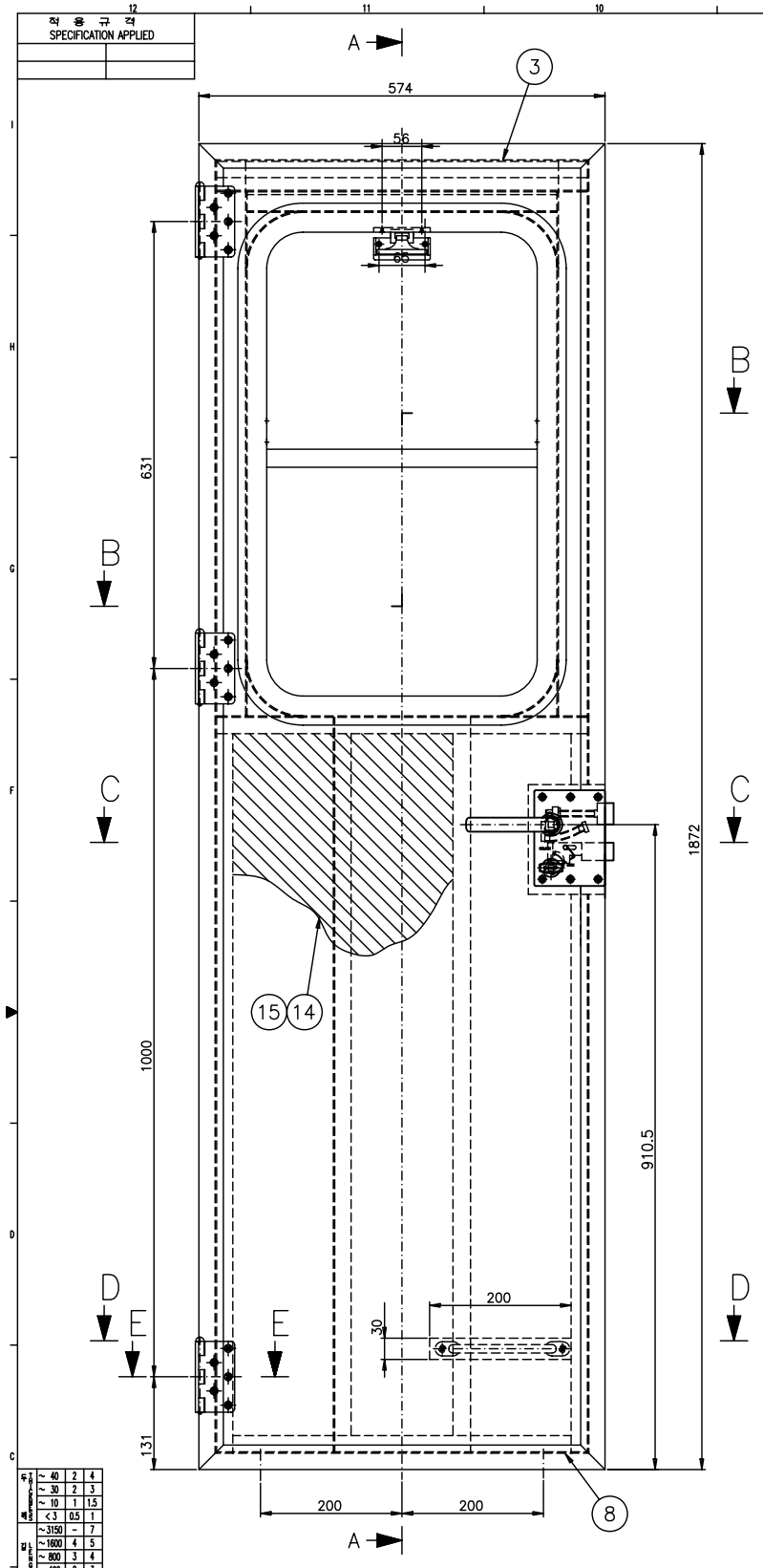

VIEW FROM INSIDE

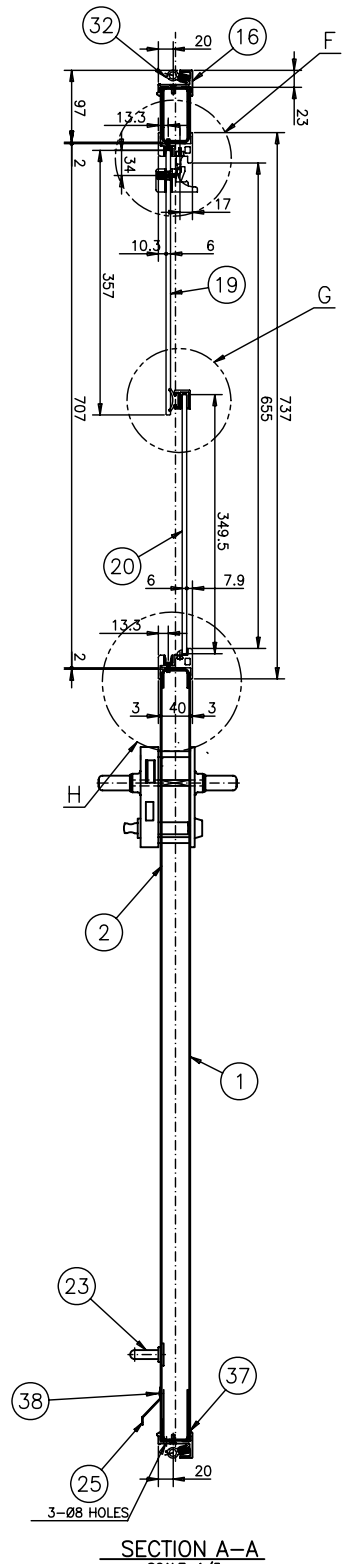

SECTION A-A
SCALE=1/5

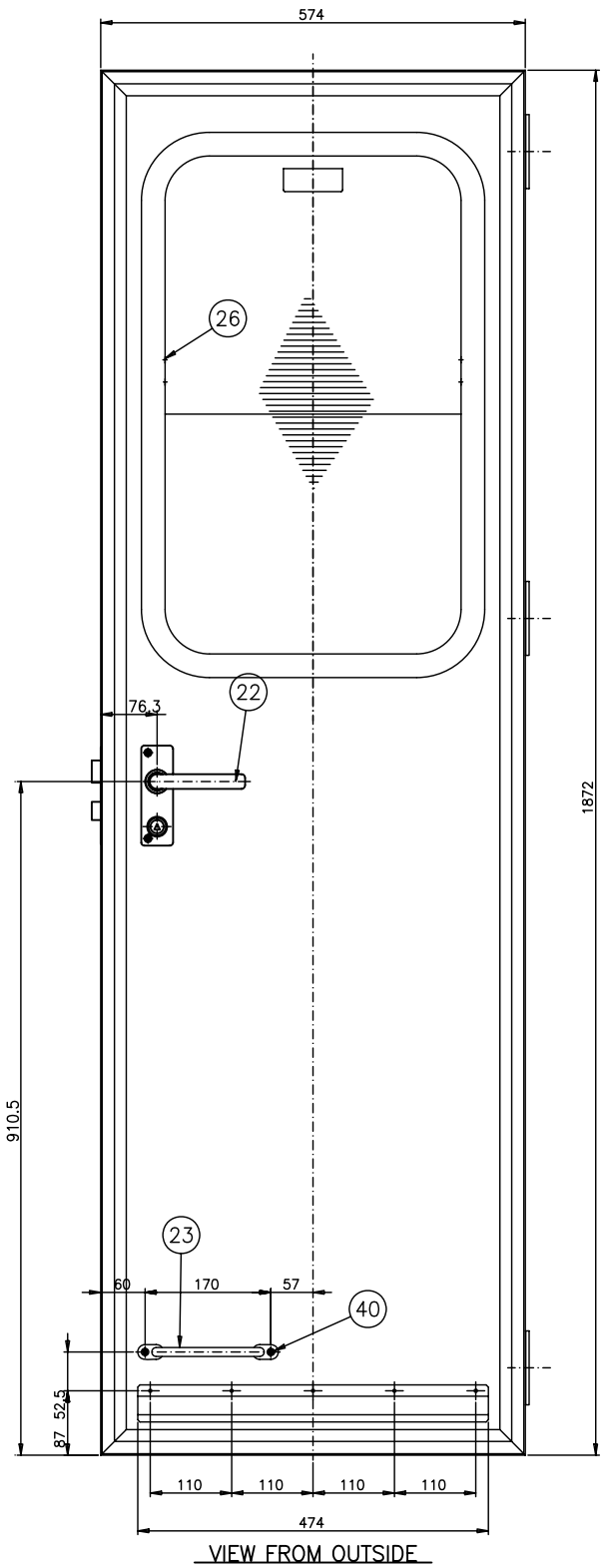

VIEW FROM OUTSIDE

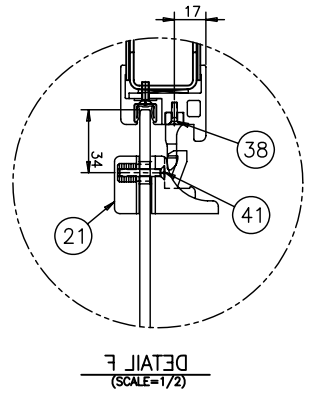

DETAIL F
(SCALE=1/2)

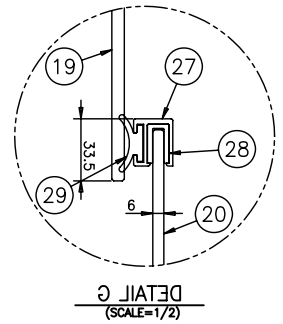

DETAIL G
(SCALE=1/2)

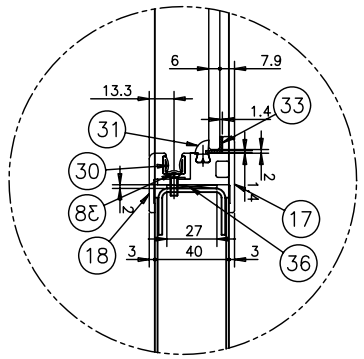

DETAIL H
(SCALE=1/2)

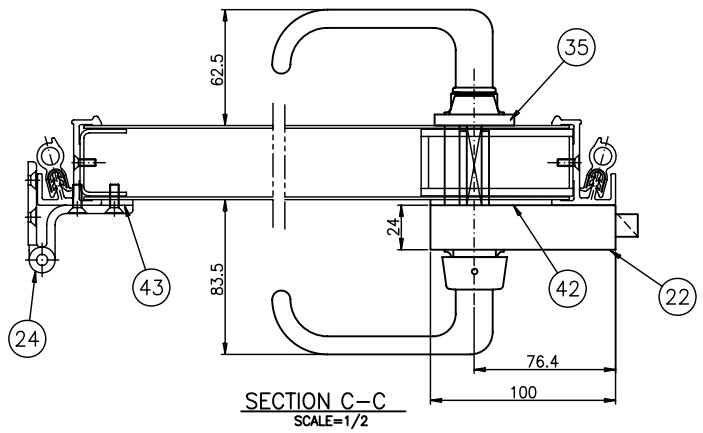

SECTION C-C
SCALE=1/2

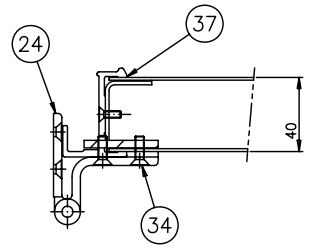

SECTION E-E
SCALE=1/2

등급 GRADE		A	B
주물모양용 CASTING		(±)	
치수 구분	~ 20M	8	14	24
	~ 15M	7	12	21
	~ 12M	6	10	18
	~ 8M	5	8	14
	~ 4M	4	6	11
	~ 2M	3	4	8
	~ 1M	2	3	6
	~ 315	1	2	4
	~ 120	1	2	3
	~ 30	1	1	1
등급 GRADE		A	B	C
용접 구조용 WELDING		(±)		
치수 구분	~ 20M	–	6.0	8.0
	~ 15M	–	5.0	7.0
	~ 12M	–	4.0	6.0
	~ 8M	–	3.0	5.0
	~ 4M	0.8	2.0	4.0
	~ 2M	0.5	1.2	3.0
	~ 1M	0.3	0.8	2.0
	~ 315	0.2	0.5	1.2
	~ 120	0.15	0.3	0.8
	~ 30	0.1	0.2	0.5
	3 ~ 6	0.05	0.1	0.2
등급 GRADE		A	B	C
기계 가공용 MACHINING		(±)		
구배되붙은 일반금속재료 GENERAL TOLERANCE				

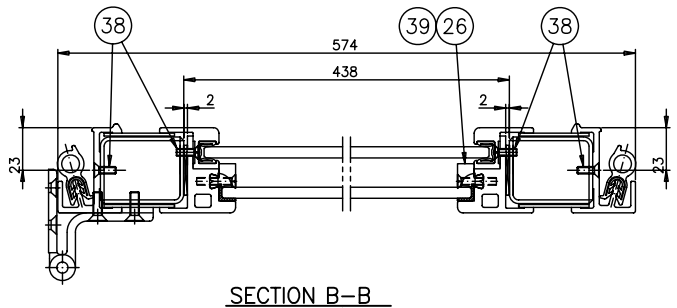

SECTION B-B
SCALE=1/2

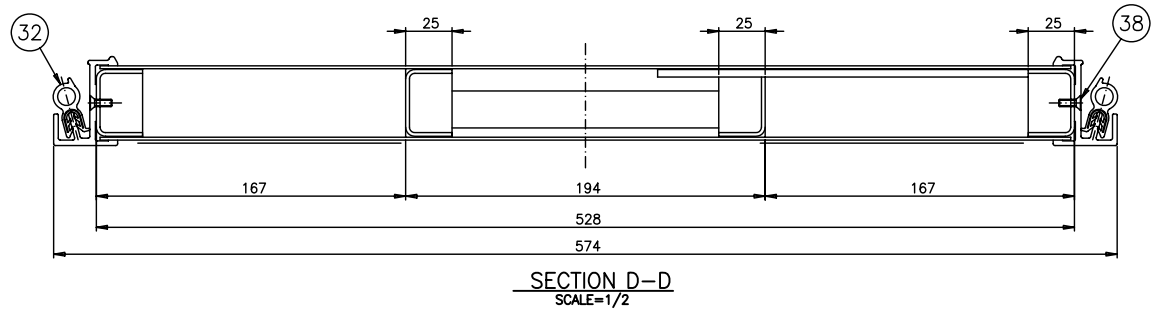

SECTION D-D
SCALE=1/2

NO.	PART NO.	DESCRIPTION	MATERIAL	QTY	W.T	REMARKS
43	RFD60010AN0-043	LINER	SUS304	3		T3x17x100
42	RFD60010AN0-042	LINER	SUS304	1		T3x65x136
41	RFD60010AN0-041	F.H SCREW	SUS304	5		M5x25L
40	RFD60010AN0-040	O.H SCREW	SUS304	2		M5x20L
39	RFD60010AN0-039	F.H SCREW	SUS304	4		M4x20L
38	RFD60010AN0-038	F.H SCREW	SUS304	60		M4x12L
37	RFD60010AN0-037	SEALANT	SILICON	AR		KE-45 GREY
36	RFD60010AN0-036	PACKING	EPDM	1		t2x27L
35	RFD60010AN0-035	O.H SCREW	SUS304	8		M5x40L
34	RFD60010AN0-034	F.H SCREW	SUS304	15		M5x16L
33	RFD60010AN0-033	RUBBER,GLASS CUSION	NEOPRENE	1		L=1124
32	RFD60027AN0	RUBBER,WEATHER STRIP	ASSY	1		L=4900
31	RFD60026AN0	RUBBER,GLASS FIXTURE	ASSY	1		L=1160
30	RFD60025AN0	RUBBER,GLASS SEAL	ASSY	1		L=2162
29	RFD60024AN0	RUBBER,PROTECT AGAINST WIND	ASSY	1		L=400
28	RFD60023AN0	RUBBER,WINDOW SEAL	ASSY	1		L=400
27	RFD60022AN0	WINDOW,PROFILE END	ASSY	1		
26	RFD60030AN0	STOPPER	ASSY	2		
25	RFD60021AN0	PLATE DRIP	ASSY	1		
24	RFD60020AN0	HINGE	ASSY	3		
23	RFD60019AN0	HANDLE ASS'Y	ASSY	1		
22	RFD60018AN0	DEVICE,LOCKING,ASSY	ASSY	1		
21	RFD60017AN0	WINDOW, LOCKING	ASSY	1		
20	RFD60016AN0	GLASS,FIXING WINDOW	ASSY	1		
19	RFD60015AN0	GLASS,SLIDING WINDOW	ASSY	1		
18	RFD60014AN0	FRAME, WINDOW SLIDING ASSY	ASSY	1		
17	RFD60013AN0	FRAME, WINDOW BODY	ASSY	1		
16	RFD60028AN0	MOLDING DOOR/FRAME ASS'Y	ASSY	1		
15	RFD60010AN0-015	ADHESIVE LIQUIDE	ASSY	1		
14	RFD60010AN0-014	HONEY COMB	A3003	1		
3	RFD60036AN0	FRAME CAB SIDE DOOR,ASSY	ASSY	1		
2	RFD60035AN0	OUTSIDE PANEL	ASSY	1		
1	RFD60034AN0	INSIDE PANEL	ASSY	1		

기호 MARK	일자 DATE	변경내역 DETAIL OF REVISION(E.C ZONE)	설변번호 E.C NO.	설계 DGN	검도 CHK	승인 APP

품번 NO.	부품 번호 PART NO.	품명 DESCRIPTION	재질 MATERIAL	수량 QTY	중량 W.T	비고 REMARKS
승인 APP	H.G.RYU 2008.11.13	재질 MAT'L ASSY	명칭 TITLE	CAB SIDE DOOR ASS'Y		
검도 CHK	H.S.KIM 2008.11.13	중중량 G.W				
설계 DGN	J.I.LEE 2008.11.11	일반공차 MC WD CT: B B B	도면 번호 DRG. NO	RFD60010AN0	Ver. 00 Rev. --	3D5101
제도 DRG	S.M.PARK 2008.11.11	SCALE 1/5 SIZE A1	MS	매수 SHEET 1 of 1		FD-

참고번호 REF. NO. FDP01902

HYUNDAI Rotem TÜVASAŞ TÜVASAŞ DMU

본 도면은 당사 재산으로서 허가없이 무단복사/배포 금지함. PROPERTY OF ISSUING ENTITY. CANNOT BE DISTRIBUTED OR REPRODUCED WITHOUT AUTHORIZATION.

CATIA